USE AND MAINTENANCE MANUAL

CAMOZZI
Automation

SERIES 5V
ELECTROMECHANICAL AXES

Contents

i. Introduction 3
1. General safety warnings 3
2. Reference documents 3
3. Components and materials 4
4. Coding 4
5. Transport and packaging 5
6. Storage 5
7. Installation 5
Fixing 5
End cap connection 6
Motor connection 6
Standard connection 7
Locking set 8
Magnet and sensor fixing 8
8. Maintenance 9
9. Dismantling and parts replacement 9
10. Disposal 10
10. Technical information 10
11. Resolution of any failure 10

i. Introduction

This user manual must be read in its entirety before beginning mounting and installation of the Series 5V electromechanical axis. This document provides guidance on some specific product features and does not provide guidance on the correct application of the product under certain conditions.

The final user must perform the controls and assessments necessary to validate the use of the product.

©All rights of reproduction, distribution and utilization of this document are the property of Camozzi Automation S.p.A.
The original instructions were written in Italian.

1. General safety warnings

- The locally valid provisions, laws and regulations for the destination of the product must always be respected.
- The Series 5V electromechanical axis must be used free from tampering or damage and in the orginal condition provided.
- The Series 5V general catalogue defines the usage limits within which the Series 5V electromechanical axis must be applied.
- The products indicated in this document are subject to performance loss due to wear or aging of components subjected to loads and planned works.
- This document provides warnings relating to the Series 5V electromechanical axis. Assessment of any interactions with other components, objects or persons within the machine or an application is to be carried out by the designer or installation engineer of the machine or application itself.
- Certain hazards are associated with the product only after it has been installed on the machine/equipment.
  It is the final user's responsibility to identify these hazards and reduce the associated risks.
- The Series 5V electromechanical axes are designed for industrial use, they are not suitable to be used in potentially explosive atmospheres or underwater.
- In case of using the Series 5V electromechanical axis in potentially corrosive atmospheres, please contact Camozzi Automation S.p.A.
- Do not cover the Series 5V electromechanical axis with paint or other substances.
- Do not use in direct contact with corrosive gases, chemicals, acids, salted water or vapour.

2. Reference documents

Before installation of the Series 5V electromechanical axis the installation engineer must ensure the following documentation is at disposal:

Document Title	Document Code	Application
Use and maintenance manual	93-7545-0011	Safety warnings
Instruction sheet (included in the package)	93-7545-0007	Basic information
Series 5V electromechanical axes	93-0518-0GB006	Electric actuation catalogue
Series DRCS and DRWB Drives for control of electrical actuation	93-0518-0GB006	Electric actuation catalogue
Series MTB Motors for electrical actuation	93-0518-0GB006	Electric actuation catalogue
Series DRWB drives for brushless motors instruction sheet	93-7545-0001	Basic information
Series DRCS drives for stepper motors instruction sheet	93-7545-0006	Basic information
Declaration of incorporation for linear systems	86-4020-0003 [1]	Documentation to read and keep
Documentation relating to application in the system and instructions for the other components	[2]	-

[1] - Only in case of purchasing the unit supplied with an already installed motor.
[2] - Only in case of installation within a machine or application, make sure to have all documentation relating to the application at hand, in order to assess any risks to persons, animals or property.

3. Components and materials

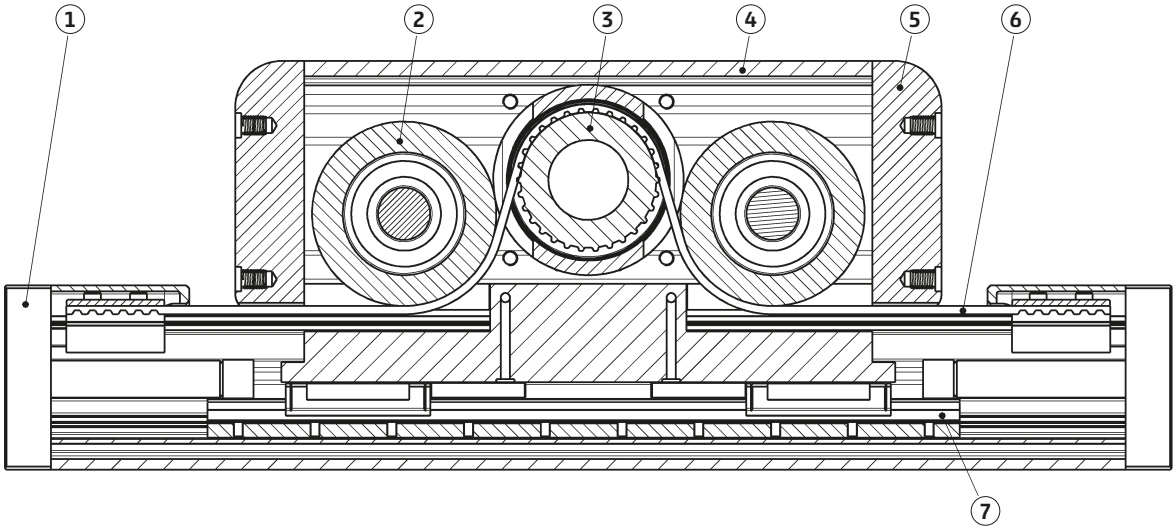

PARTS		MATERIALS
1	End cap	Aluminium alloy
2	Idler	Aluminium alloy
3	Pulley	Steel
4	Omega body	Aluminium alloy
5	Cover	Aluminium alloy
6	Belt	PU + Steel
7	Recirculating ball guide	Steel

4. Coding

5V	S	050	TBL	0200	A	S	1	

5V	SERIES
S	PROFILE: S = square section
050	SIZE: 050 = 50x50 mm 065 = 65x65 mm 080 = 80x80 mm
TBL	TRANSMISSION: TBL = toothed belt
0200	STROKE [C]: 0050 ÷ 1500 mm
A	VERSION: A = standard
S	SLIDER: S = standard
1	NUMBER OF SLIDERS: 1 = 1 slider
	TYPE OF END CAP: = standard SA = integrated shock absorber

5. Transport and packaging

The product packaging is suited to handling and lifting with warehouse equipment.
Check the integrity of the packaging before handling. For a proper vertical lifting, bring the omega body to the end of the stroke (towards the side that will be lifted), then lift it with a belt through the pulley hole.

Accidental falling and/or crushing of the packaging may compromise the functionality of the product and cause serious injury to the handler.

CAUTION!
In case of manual lifting, first evaluate the uncontrolled movement of the omega body or of the aluminium profile before acting.
CAUTION!
Before manual transport, evaluate the mass of the product and check if such transport method is compatible with national standards.

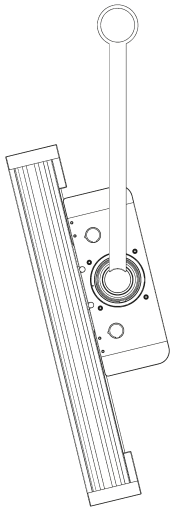

- The proper handling of the product should be carried out according to the figure above, lifting the Series 5V electromechanical axis with appropriate means.
- Before lifting the Series 5V electromechanical axis, make sure the omega body is brought to the end of the axis stroke.
- It is forbidden to lift the Series 5V electromechanical axis using the end caps.
- It is forbidden to lift the Series 5V electromechanical axis using the toothed belt.

6. Storage

- The product should be stored in dry environments protected from the weather and external corrosive agents.
- Storage temperatures should be between -20°C and +80°C.

7. Installation

The assembly of the Series 5V electromechanical axis should only be carried out by specialized or trained staff under the guidance and supervision of qualified staff.

Fixing

Series 5V electromechanical axis can be mounted to a vertical surface. Blocking is done by means of the connections present on the omega body.
Series 5V electromechanical axis can be mounted to a horizontal surface. Blocking is done by means of the connections present on the cover of the omega body.

The holes present on the sides of the omega body must be used for fixing the motor components only.
The mechanical characteristics and the flatness of the support surface may affect the life of the product and its precision.

MOUNTING ON VERTICAL SURFACE

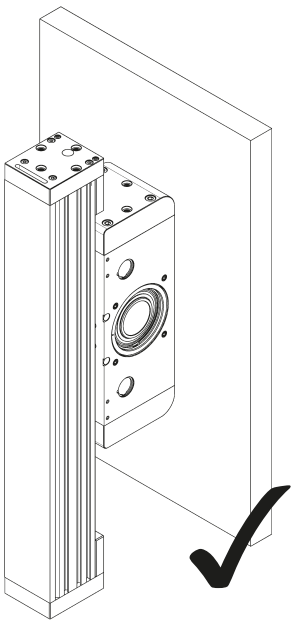

MOUNTING ON HORIZONTAL SURFACE

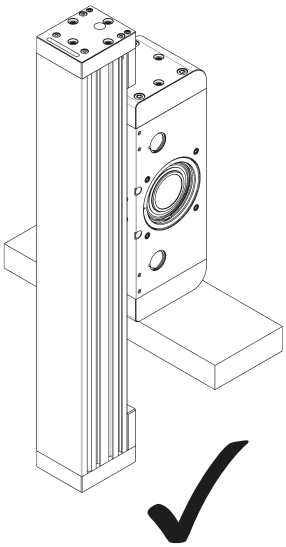

WRONG MOUNTING MOTOR HOLES

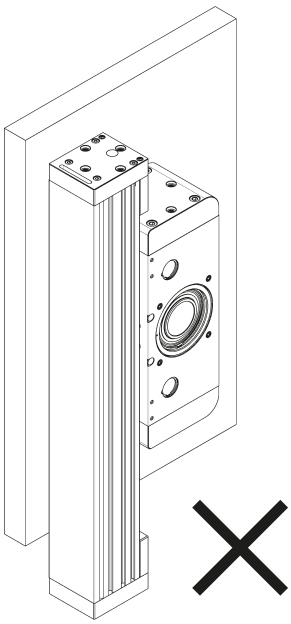

End cap connection

The end cap of the Series 5V electromechanical axis has 4 threaded* holes so it can be mounted to the application.
*these holes are enforced with steel covered threads

In order to guarantee a proper positioning of any element mounted on the end cap, we recommend to use at least 2 centring bushes provided with the Series 5V electromechanical axis.

BUSHES ON END CAP

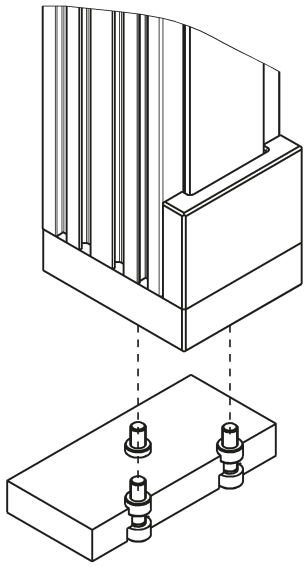

Motor connection

The omega body of the Series 5V electromechanical axis has been designed to assemble the input of the motor connection on both sides.

The motion transmission is ensured through locking sets. See "Locking set" for more information. Following you can find the different assemblies possible.

CAUTION!
In order to use the Series 5V electromechanical axis in vertical operation position, it is necessary to use motors with brake.

The image below shows the possible connections to the Series 5V electromechanical axis.

MOTOR CONFIGURATION			
SIZE	**FLANGE**	**GEARBOX**	**MOTOR**
50	FR-5V-50	GB-060-...	MTB-040-...
		GC-060-...	
65	FR-5V-65	GB-080-...	MTB-075-...
		GC-080-...	
80	FR-5V-80	GB-120-...	MTB-100-...
		GC-120-...	

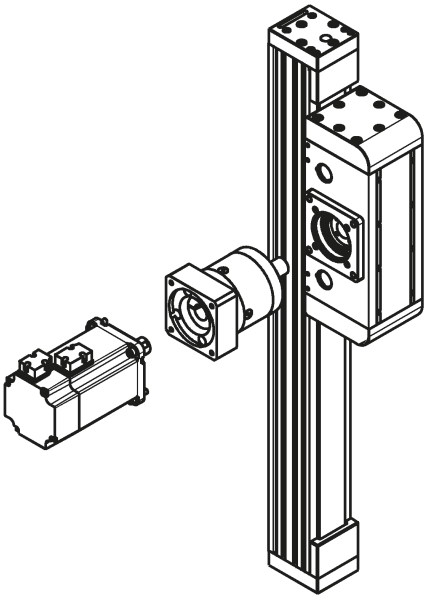

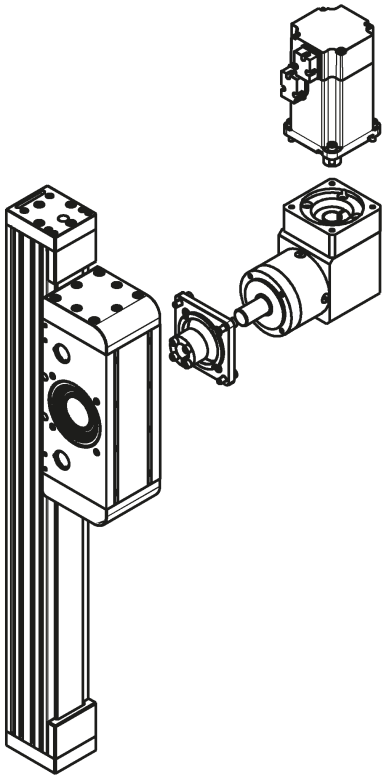

Standard connection

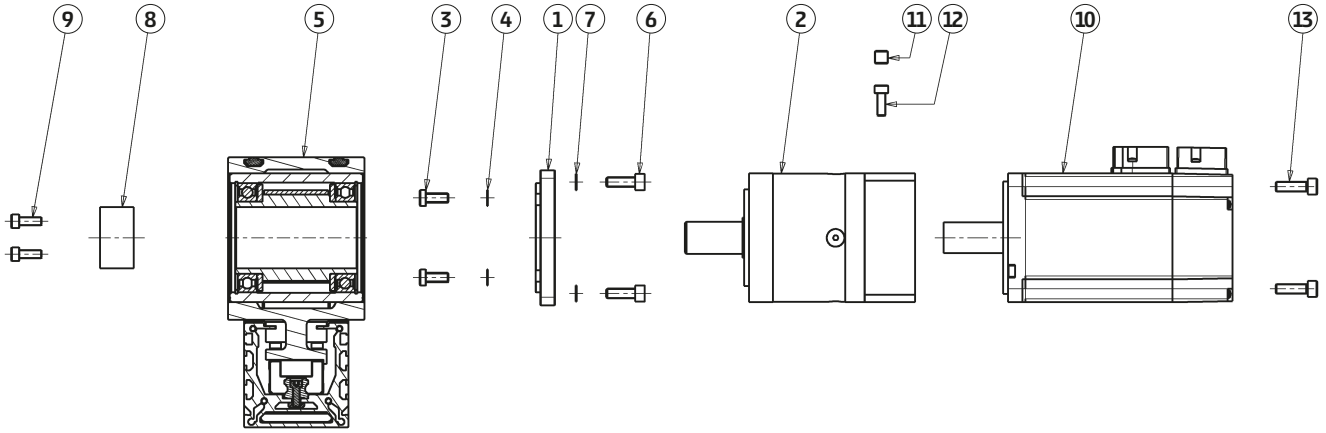

1. Connection flange
2. Planetary gearbox
3. Gearbox screws
4. Lock washer
5. Series 5V electromechanical axis
6. Flange fixing screws
7. Lock washer
8. Locking set
9. Locking set screws
10. Motor
11. Gearbox grub screw
12. Gearbox clamping screw
13. Motor fixing screws

	Num.	
Mod.	**3 (DIN 7984)**	**6 (DIN 912)**
FR-5V-50	M5x10	M5x14
FR-5V-65	M6x14	M6x18
FR-5V-80	M10x20	M8x30

STEP 1
Mount the connection flange (**1**) on the planetary gearbox (**2**) with the appropriate screws (**3**), with lock washers in between (**4**).

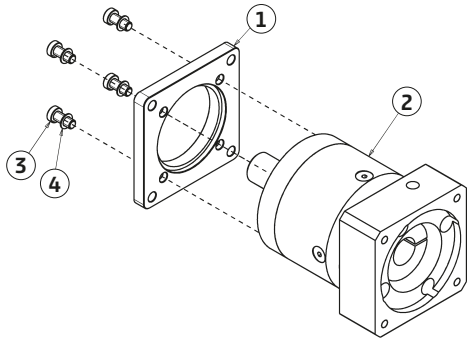

STEP 2
Couple the connection flange (**1**) with the Series 5V electromechanical axis (**5**) through the appropriate centring.
Tighten the screws (**6**), with the lock washers in between (**7**), to keep the connection flange (**1**) in position.
Couple the locking set (**8**) from the opposite side of the omega body within the pulley until the gearbox shaft (**2**) does not protrude.
Tighten the screws of the locking set (**9**) with the proper tightening torque, see the "**Locking set**" section.

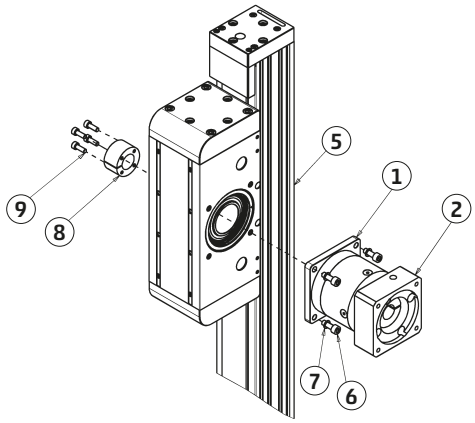

STEP 3
Couple the motor (**10**) with the gearbox (**2**), tightening the supplied screws (**13**).
Remove the grub screw (**11**) on the flange of the gearbox (**2**) and tighten the screw (**12**) of the clamp with the tightening torque indicated in the table below, as specified by the gearbox manufacturer.

CH = hexagon-head screw size
CS =Tightening torque

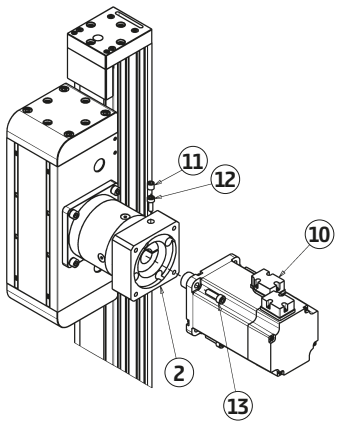

Mod.	**GB-060**		**GB-080**		**GB-120**		**GC-060**	**GC-080**	**GC-120**
CH [mm]	3	4	5	5	6	6	4	6	6
CS [Nm]	4.5	9.5	4.5	16.5	16.5	40	9,8	41	41

Locking Set

In order to transmit rotational movement, the Series 5V uses locking sets, available in different sizes depending on the size of the GB gearbox.

SIZE		50	65	80
Length	L1	17	21	26
Total size	L2	20	26	32
Hole diameter	ø D1	14	20	25
Outside diameter	ø D2	26	38	47
Screw [ISO 4762]	E1	M3	M5	M6
Tightening Torque [Nm]	E1	2.1	4.9	17

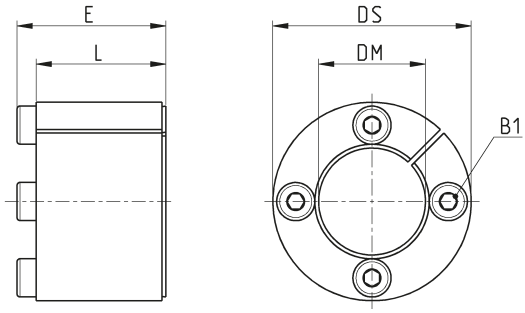

Magnet and sensor fixing

Series 5V electromechanical axis provides the possibility to assemble accessory sensor kits. [1]

Series 5V electromechanical axis has a slot for the assembly of a magnet kit [2] on all sizes.

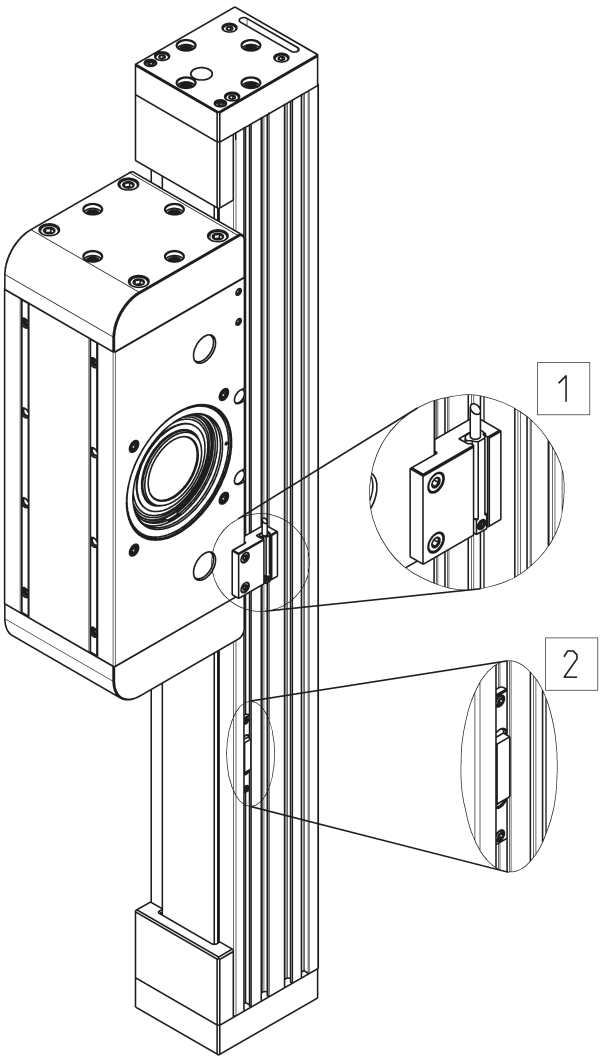

8. Maintenance

Cleaning
For the cleaning of the Series 5V electromechanical axis, the use of solvents and aggressive cleaning products is forbidden, as they may damage seals or aluminium elements because of chemical incompatibility. It is however possible to use mild water-soluble detergents (Nonetheless, check the compatibility of the unit's materials with such cleaning products).

CAUTION: disconnect all electrical components from the electrical supply and suitably protect all connectors and electrical contacts against humidity.

Lubrication
The Series 5V electromechanical axis is supplied with already-lubricated guides. With the lubrication nipple provided, it is possible to lubricate the blocks through a specifically-designed system, directly from the slider.

The chart on the right allows to determine the re-lubrication stroke "PL". The load factor (fC) is obtained as follows:

$$f_C = \left|\frac{Ceq}{Cma}\right|$$

Ceq and Cma are values included in the catalogue.

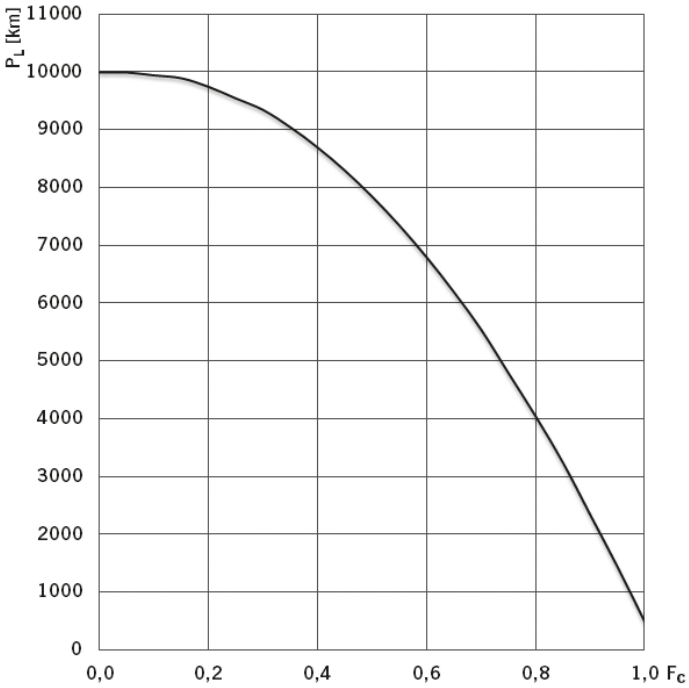

APPLICATION	ACCELERATION [m/s²]	SPEED [m/s]	WORK CYCLE	COEFFICIENT fw
Light weight	< 10	< 1.5	< 35%	1 ÷ 1.25
Normal	10 ÷ 25	1.5 ÷ 2.5	35% ÷ 65%	1.25 ÷ 1.5
Heavy Duty	> 25	> 2.5	> 65%	1.5 ÷ 3

Once the PL value has been determined, it is necessary to evaluate the conditions of use "fW" and then calculate the re-lubrication interval with the following formula:

$$\Delta L = \frac{PL}{fw}$$

Type of lubricant
For the lubrication of the Series 5V electromechanical axis, the use of grease with added lithium soap and grade NLGI 1, that is compatible with NYE Lubricant Rheolube 363 AX 1, is recommended. For lubrication, a grease-gun is available with the ordering code 70-7902-0029

Quantity of lubricant

SIZE	INITIAL LUBRICATION [cm³]	REPLENISHMENT [cm³]
50	1.39	0.46
65	1.63	0.46
80	1.86	0.46

9. Dismantling and parts replacement

In case of anomalies of the Series 5V electromechanical axis or if it is necessary to replace groups of internal components, contact the Camozzi Automation S.p.A. After-Sales Service that will evaluate the level of intervention and the appropriate counter-measures to take.

Disassembly and replacement of components should only be carried out by Camozzi Automation S.p.A. staff. For any maintenance that involves opening the Series 5V electromechanical axis, please contact the technical assistance (see section 12).

10. Disposal

in the Series 5V electromechanical axis there is:
- Aluminium alloy
- Steel
- Plastic material
- Grease
- Epoxy resin

Components must be disposed of in compliance with current national and international standards and directives after having collected any lubricant present and disposing of it separately.

11. Technical information

According general catalogue Series 5V electromechanical axis.

12. Resolution of any failure

FAILURE	POSSIBLE CAUSE	POSSIBLE SOLUTION
Profile does not move	Incorrect configuration of the operating parameters	Check that the correct parameters, appropriate for the use of the Series 5V electromechanical axis have been entered
	Applied load heavier than that stated in the catalogue	Reduce the load or replace the unit with a bigger size that is able to support the load
	Breakage of the toothed belt	Return the Series 5V electromechanical axis to Camozzi Automation S.p.A. for repair or replacement
	Slippage of motor connections	Check the tightening of the locking set and the clamp of the gearbox
Positioning error	Slippage of motor connections	Check the tightening of the locking set and the clamp of the gearbox
	Wear	Return the Series 5V electromechanical axis to Camozzi Automation S.p.A. for repair or replacement
	Loosening of the traction screw of the belt	Return the Series 5V electromechanical axis to Camozzi Automation S.p.A. for repair or replacement
	Sensor not reading	Check that the positioning and connection of the sensors and relating accessories are correct, see manual
Excessive noise or noise alteration	Excessive wear	Return the Series 5V electromechanical axis to Camozzi Automation S.p.A. for repair or replacement
Overheating of the unit	Excessive torque absorption because of incorrect fixings	Check that the fixings are not causing the misalignment or twisting of the unit

CAUTION: in case of fire in the surrounding area it is recommended to extinguish with carbon dioxide CO^2

MIX COMUNICAZIONE - MI

Contacts

Camozzi Automation S.p.A.
Via Eritrea, 20/I
25126 Brescia - Italy
Tel.+39 030 37921
www.camozzi.com

Customer Service
Tel. +39 030 3792790
service@camozzi.com

Product Certification
Information concerning
product certifications, EC standards,
conformity declarations and instructions
productcertification@camozzi.com

93-7545-0011 09/2019

CAMOZZI
Automation

A Camozzi Group Company
www.camozzi.com